123A, 126B
Preferred™ Series Air Conditioner
with Puron® Refrigerant
1–1/2 To 5 Nominal Tons (Sizes 018 to 060)

Installation Instructions

SAFETY CONSIDERATIONS

Improper installation, adjustment, alteration, service, maintenance, or use can cause explosion, fire, electrical shock, or other conditions which may cause death, personal injury, or property damage. Consult a qualified installer, service agency, or your distributor or branch for information or assistance. The qualified installer or agency must use factory–authorized kits or accessories when modifying this product. Refer to the individual instructions packaged with the kits or accessories when installing.

Follow all safety codes. Wear safety glasses, protective clothing, and work gloves. Use quenching cloth for brazing operations. Have fire extinguisher available. Read these instructions thoroughly and follow all warnings or cautions included in literature and attached to the unit. Consult local building codes and current editions of the National Electrical Code (NEC) NFPA 70. In Canada, refer to current editions of the Canadian electrical code CSA 22.1.

Recognize safety information. This is the safety–alert symbol ⚠. When you see this symbol on the unit and in instructions or manuals, be alert to the potential for personal injury. Understand these signal words; DANGER, WARNING, and CAUTION. These words are used with the safety–alert symbol. DANGER identifies the most serious hazards which **will** result in severe personal injury or death. WARNING signifies hazards which **could** result in personal injury or death. CAUTION is used to identify unsafe practices which **would** result in minor personal injury or product and property damage. NOTE is used to highlight suggestions which **will** result in enhanced installation, reliability, or operation.

⚠ WARNING

ELECTRICAL SHOCK HAZARD

Failure to follow this warning could result in personal injury or death.

Before installing, modifying, or servicing system, main electrical disconnect switch must be in the OFF position. There may be more than 1 disconnect switch. Lock out and tag switch with a suitable warning label.

INSTALLATION INSTRUCTIONS

NOTE: In some cases noise in the living area has been traced to gas pulsations from improper installation of equipment.

1. Locate unit away from windows, patios, decks, etc. where unit operation sound may disturb customer.
2. Ensure that vapor and liquid tube diameters are appropriate for unit capacity.
3. Run refrigerant tubes as directly as possible by avoiding unnecessary turns and bends.
4. Leave some slack between structure and unit to absorb vibration.
5. When passing refrigerant tubes through the wall, seal opening with RTV or other pliable silicon–based caulk. (See Fig. 1.)
6. Avoid direct tubing contact with water pipes, duct work, floor joists, wall studs, floors, and walls.
7. Do not suspend refrigerant tubing from joists and studs with a rigid wire or strap which comes in direct contact with tubing.(See Fig. 1.)
8. Ensure that tubing insulation is pliable and completely surrounds vapor tube.
9. When necessary, use hanger straps which are 1 in. (25.4 mm) wide and conform to shape of tubing insulation. (See Fig. 1.)
10. Isolate hanger straps from insulation by using metal sleeves bent to conform to shape of insulation.

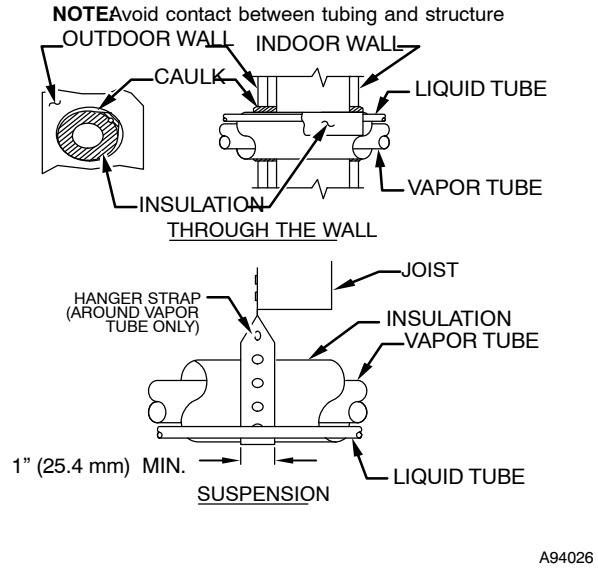

A94026

Fig. 1 – Piping Installation

The outdoor unit contains system refrigerant charge for operation with AHRI rated indoor unit when connected by 15 ft. (4.57 m) of field–supplied or factory accessory tubing. For proper unit operation, check refrigerant charge using charging information located on control box cover and/or in the Check Charge section of this instruction.

IMPORTANT: Maximum liquid–line size is 3/8–in. OD for all residential applications including long line.

IMPORTANT: Always install the factory–supplied liquid–line filter drier. If replacing the filter drier, refer to Product Data Digest for appropriate part number. Obtain replacement filter driers from your distributor or branch.

INSTALLATION

IMPORTANT: Effective January 1, 2015, all split system and packaged air conditioners must be installed pursuant to applicable regional efficiency standards issued by the Department of Energy.

Check Equipment and Job Site

UNPACK UNIT

Move to final location. Remove carton taking care not to damage unit.

Inspect Equipment

File claim with shipping company prior to installation if shipment is damaged or incomplete. Locate unit rating plate on unit corner panel. It contains information needed to properly install unit. Check rating plate to be sure unit matches job specifications.

Install on a Solid, Level Mounting Pad

If conditions or local codes require the unit be attached to pad, tie down bolts should be used and fastened through knockouts provided in unit base pan. Refer to unit mounting pattern in Fig. 2 to determine base pan size and knockout hole location.

For hurricane tie downs, contact local distributor for details and PE (Professional Engineer) certification, if required by local authorities.

On rooftop applications, mount on level platform or frame. Place unit above a load−bearing wall and isolate unit and tubing set from structure. Arrange supporting members to adequately support unit and minimize transmission of vibration to building. Consult local codes governing rooftop applications.

Roof mounted units exposed to winds may require wind baffles. Consult the Application Guideline and Service Manual − Residential Split System Air Conditioners and Heat Pumps for wind baffle construction.

NOTE: Unit must be level to within ±2° (±3/8 in./ft.) per compressor manufacturer specifications.

Clearance Requirements

When installing, allow sufficient space for airflow clearance, wiring, refrigerant piping, and service. Allow 24 in. (609.6 mm) clearance to service end of unit and 48 in. (1219.2 mm) (above unit. For proper airflow, a 6−in. (152.4 mm) clearance on 1 side of unit and 12−in. (304.8 mm) on all remaining sides must be maintained. Maintain a distance of 24 in. (609.6 mm) between units. Position so water, snow, or ice from roof or eaves cannot fall directly on unit.

On rooftop applications, locate unit at least 6 in. (152.4 mm) above roof surface.

Operating Ambient

The minimum outdoor operating ambient in cooling mode without accessory is 55 °F (12.78 °C), and the maximum outdoor operating ambient in cooling mode is 125°F (51.67 °C).

Make Piping Connections

⚠ WARNING

PERSONAL INJURY AND ENVIRONMENTAL HAZARD

Failure to follow this warning could result in personal injury or death.

Relieve pressure and recover all refrigerant before system repair or final unit disposal. Use all service ports and open all flow−control devices, including solenoid valves.

Federal regulations require that you do not vent refrigerant to the atmosphere. Recover during system repair or final unit disposal.

⚠ CAUTION

UNIT DAMAGE HAZARD

Failure to follow this caution may result in equipment damage or improper operation.

If ANY refrigerant tubing is buried, provide a 6−in. vertical rise at service valve. Refrigerant tubing lengths up to 36−in. may be buried without further special consideration. Do not bury lines more than 36−in. (914.4 mm).

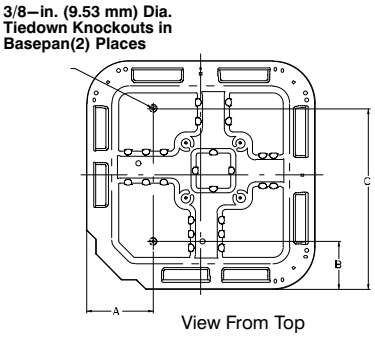

UNIT BASE PAN Dimension	TIEDOWN KNOCKOUT LOCATIONS in. (mm)		
	A	B	C
26 X 26	9−1/8 (231.8)	4−7/16 (112.7)	21−1/4 (539.8)
31−1/2 X 31−1/2	9−1/8 (231.8)	6−9/16 (166.7)	24−11/16 (627.1)
35 X 35	9−1/8 (231.8)	6−9/16 (166.7)	28−7/16 (722.3)

A05177

Fig. 2 − Tiedown Knockout Locations

Outdoor units may be connected to indoor section using accessory tubing package or field−supplied refrigerant grade tubing of correct size and condition. Rated tubing diameters shown in Table 1 are recommended up to 80 ft. (24.38 m). See Product Data for acceptable alternate vapor diameters and associated capacity losses. For tubing requirements beyond 80 ft. (24.38 m), substantial capacity and performance losses can occur. Following the recommendations in the Longline Guideline will reduce these losses. Refer to Table 1 for field tubing diameters. Refer to Table 5 for accessory requirements.

There are no buried−line applications greater than 36−in. (914.4 mm) allowed.

If refrigerant tubes or indoor coil are exposed to atmosphere, they must be evacuated to 500 microns to eliminate contamination and moisture in the system.

Outdoor Unit Connected to Factory Approved Indoor Unit

Outdoor unit contains correct system refrigerant charge for operation with factory approved AHRI rated indoor unit when connected by 15 ft. (4.57 m) of field−supplied or factory−accessory tubing, and factory supplied filter drier. Check refrigerant charge for maximum efficiency.

Refrigerant Tubing Connection Outdoor

Connect vapor and liquid tubes to fittings on vapor and liquid service valves (see Table 1.) Use refrigerant grade tubing

Sweat Connection

⚠ CAUTION

UNIT DAMAGE HAZARD

Failure to follow this caution may result in equipment damage or improper operation.

Service valves must be wrapped in a heat−sinking material such as a wet cloth while brazing.

Use refrigeration grade tubing. Service valves are closed from factory and ready for brazing. After wrapping service valve with a wet cloth, braze sweat connections using industry accepted methods and materials. Consult local code requirements. Refrigerant tubing and indoor coil are now ready for leak testing. This check should include all field and factory joints.

Table 1 – Refrigerant Connections and Recommended Liquid and Vapor Tube Diameters (In.)

123A			
UNIT SIZE (SERIES)	LIQUID	RATED VAPOR up to 80 ft. (24.38 m)*	
	Connection & Tube Diameter	Connection Diameter	Tube Diameter
018, 024	3/8	5/8	5/8
030, 036	3/8	3/4	3/4
042, 048	3/8	7/8	7/8
060 (all series)	3/8	7/8	1−1/8

126B			
UNIT SIZE	LIQUID	RATED VAPOR up to 80 ft. (24.38 m)*	
	Connection & Tube Diameter	Connection Diameter	Tube Diameter
018, 024, 030	3/8	3/4	3/4
036, 042, 048	3/8	7/8	7/8
060	3/8	7/8	1−1/8

* Units are rated with 25 ft. (7.6 m) of lineset. See Product Data sheet for performance data when using different size and length linesets.

Notes:
1. Do not apply capillary tube or fixed orifice indoor coils to these units.
2. For Tubing Set lengths between 80 and 200 ft. (24.38 and 60.96 m) horizontal or 35 ft. (10.7 m) vertical differential 250 ft. (76.2 m) Total Equivalent Length), refer to the Residential Piping and Longline Guide line− Air Conditioners and Heat Pumps using Puron refrigerant.
3. For alternate liquid line options on 18−42 size units, see Product Data or Residential Piping and Application Guideline

Install Liquid−Line Filter Drier Indoor

⚠ CAUTION

UNIT DAMAGE HAZARD

Failure to follow this caution may result in equipment damage or improper operation.

1. Installation of filter drier in liquid line is required.

2. Filter drier must be wrapped in a heat−sinking material such as a wet cloth while brazing.

Refer to Fig. 3 and install filter drier as follows:

1. Braze 5−in. liquid tube to the indoor coil.
2. Wrap filter drier with damp cloth.
3. Braze filter drier to above 5−in. (127 mm) liquid tube. Flow arrow must point towards indoor coil.
4. Connect and braze liquid refrigerant tube to the filter drier.

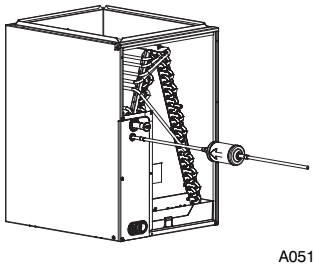

A05178

Fig. 3 – Liquid Line Filter Drier

Evacuate Refrigerant Tubing and Indoor Coil

⚠ CAUTION

UNIT DAMAGE HAZARD

Failure to follow this caution may result in equipment damage or improper operation.

Never use the system compressor as a vacuum pump.

Refrigerant tubes and indoor coil should be evacuated using the recommended deep vacuum method of 500 microns. The alternate triple evacuation method may be used (see triple evacuation procedure in service manual). Always break a vacuum with dry nitrogen.

Deep Vacuum Method

The deep vacuum method requires a vacuum pump capable of pulling a vacuum of 500 microns and a vacuum gage capable of accurately measuring this vacuum depth. The deep vacuum method is the most positive way of assuring a system is free of air and liquid water. A tight dry system will hold a vacuum of 1000 microns after approximately 7 minutes. See Fig. 4.

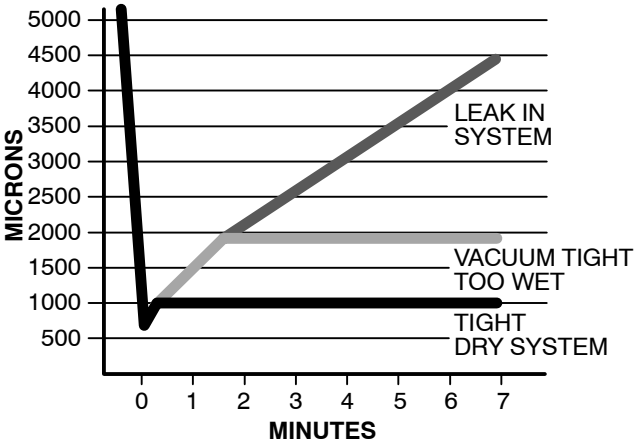

A95424

Fig. 4 – Deep Vacuum Graph

Final Tubing Check

IMPORTANT: Check to be certain factory tubing on both indoor and outdoor unit has not shifted during shipment. Ensure tubes are not rubbing against each other or any sheet metal or wires. Pay close attention to feeder tubes, making sure wire ties on feeder tubes are secure and tight.

Installing with Indoor Piston

Outdoor Unit Connected to Factory Approved Indoor Unit

Check piston size shipped with indoor unit to see if it matches required indoor piston size. If it does not match, replace indoor piston with correct piston size.

NOTE: Correct pistons are shipped with outdoor units in the accessory bag and are only qualified for piston fan coils. Example fan coils with piston: FB4C and FY5B (1.5 through 4 ton)

When changing indoor piston, use a back−up wrench. Hand tighten hex nut, then tighten with wrench 1/2 turn. Do not exceed 30 ft−lbs. The indoor piston contains a Teflon ring (or seal) which is used to seat against the inside of distributor body, and must be installed properly to ensure proper seating. See Fig. 5

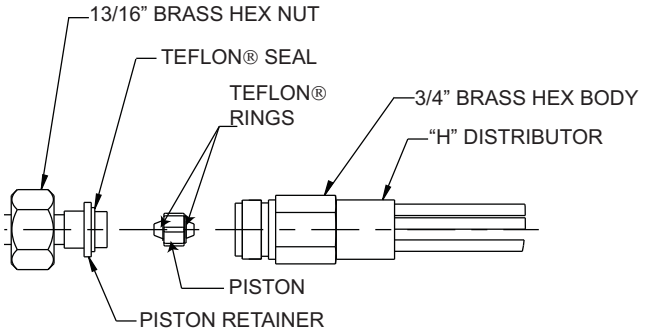

Fig. 5 – Indoor (Cooling) Piston

⚠ CAUTION

PRODUCT OPERATION HAZARD

Failure to follow this caution may result in equipment damage or improper operation.

If using a TXV in conjunction with a single−phase reciprocating compressor, a compressor start capacitor and relay are required.

Units with Cooling Mode TXV

Units installed with cooling mode TXV require charging by the subcooling method.

1. Operate unit a minimum of 15 minutes before checking charge.
2. Measure liquid service valve pressure by attaching an accurate gage to service port.
3. Measure liquid line temperature by attaching an accurate thermistor type or electronic thermometer to liquid line near outdoor coil.
4. Refer to unit rating plate for required subcooling temperature.
5. Refer to Table 2 – *Rating Plate (required) Subcooling Temperature*. Find the point where required subcooling temperature intersects measured liquid service valve pressure.
6. To obtain required subcooling temperature at a specific liquid line pressure, add refrigerant if liquid line temperature is higher than indicated or reclaim refrigerant if temperature is lower. Allow a tolerance of ±3°F (±1.7°C).

Units with Indoor Piston

Units installed with indoor pistons require charging by the superheat method.

The following procedure is valid when indoor airflow is within ±21 percent of its rated CFM.

1. Operate unit a minimum of 15 minutes before checking charge.
2. Measure suction pressure by attaching an accurate gage to suction valve service port.
3. Measure suction temperature by attaching an accurate thermistor type or electronic thermometer to suction line at service valve.
4. Measure outdoor air dry−bulb temperature with thermometer.
5. Measure indoor air (entering indoor coil) wet−bulb temperature with a sling psychrometer.
6. Refer to Table 3 – *Superheat Charging – AC Only*. Find outdoor temperature and evaporator entering air wet−bulb temperature. At this intersection, note superheat. Where a dash (−−) appears on the table, do not attempt to charge system under these conditions or refrigerant slugging may occur. Charge must be weighted in, adding or removing 0.6 oz/ft of 3/8 liquid line above or below 15 feet (4.6m) respectively.
7. Refer to Table 4 – *Required Suction−Line Temperature*. Find superheat temperature (from #6 above) and suction pressure. At this intersection, note suction line temperature.
8. If unit has a higher suction line temperature than charted temperature, add refrigerant until charted temperature is reached.
9. If unit has a lower suction line temperature than charted temperature, reclaim refrigerant until charted temperature is reached.
10. When adding refrigerant, charge in liquid form into suction service port using a flow−restricting device.
11. If outdoor air temperature or pressure at suction valve changes, charge to new suction line temperature indicated on chart.
12. Optimum performance will be achieved when the operating charge produces 10°F suction superheat at suction service valve with 95°F (35°C) outdoor ambient and 80°F (27°C) dry bulb (67°F / 19°C) wet bulb) indoor temperature (DOE "A" test conditions) at rated airflow.

Table 2 – Rating Plate (required) Subcooling Temperatures

Measure Liquid Pressure (psig)	R—410A Required Liquid Line Temperature °F (°C)											
	°F	(°C)	°F	(°C)	°F	(°C)	°F	(°C)	°F	(°C)	°F	(°C)
	6	3	8	4	10	6	12	7	14	8	16	9
251	78	26	76	24	74	23	72	22	70	21	68	20
259	80	27	78	26	76	24	74	23	72	22	70	21
266	82	28	80	27	78	26	76	24	74	23	72	22
274	84	29	82	28	80	27	78	26	76	24	74	23
283	86	30	84	29	82	28	80	27	78	26	76	24
291	88	31	86	30	84	29	82	28	80	27	78	26
299	90	32	88	31	86	30	84	29	82	28	80	27
308	92	33	90	32	88	31	86	30	84	29	82	28
317	94	34	92	33	90	32	88	31	86	30	84	29
326	96	36	94	34	92	33	90	32	88	31	86	30
335	98	37	96	36	94	34	92	33	90	32	88	31
345	100	38	98	37	96	36	94	34	92	33	90	32
364	104	40	102	39	100	38	98	37	96	36	94	34
374	106	41	104	40	102	39	100	38	98	37	96	36
384	108	42	106	41	104	40	102	39	100	38	98	37
395	110	43	108	42	106	41	104	40	102	39	100	38
406	112	44	110	43	108	42	106	41	104	40	102	39
416	114	46	112	44	110	43	108	42	106	41	104	40
427	116	47	114	46	112	44	110	43	108	42	106	41
439	118	48	116	47	114	46	112	44	110	43	108	42
450	120	49	118	48	116	47	114	46	112	44	110	43
462	122	50	120	49	118	48	116	47	114	46	112	44
474	124	51	122	50	120	49	118	48	116	47	114	46

Table 3 – Superheat Charging – AC Only

OUTDOOR TEMP (°F)	EVAPORATOR ENTERING AIR TEMPERATURE (°F WB)													
	50	52	54	56	58	60	62	64	67	68	70	72	74	76
55	9	12	14	17	20	23	26	29	32	35	37	40	42	45
60	7	10	12	15	18	21	24	27	30	33	35	38	40	43
65	—	6	10	13	16	19	21	24	27	30	33	36	38	41
70	—	—	7	10	13	16	19	21	24	27	30	33	36	39
75	—	—	—	6	9	12	15	18	21	24	28	31	34	37
80	—	—	—	—	5	8	12	15	18	21	25	28	31	35
85	—	—	—	—	—	—	8	11	15	19	22	26	30	33
90	—	—	—	—	—	—	5	9	13	16	20	24	27	31
95	—	—	—	—	—	—	—	6	10	14	18	22	25	29
100	—	—	—	—	—	—	—	—	8	12	15	20	23	27
105	—	—	—	—	—	—	—	—	5	9	13	17	22	26
110	—	—	—	—	—	—	—	—	—	6	11	15	20	25
115	—	—	—	—	—	—	—	—	—	—	8	14	18	23

*Optimum performance point, 95°F (35°C) outdoor ambient and (80°F / 27°C dry bulb), (67°F / 19°C wet bulb) indoor conditions. (DOE A Test Conditions)
Where a dash (––) appears do not attempt to charge system under these conditions or refrigerant slugging may occur. Charge must be weighed in.
Note: Superheat °F is at low–side service port, Allow a tolerance of ±3°F (±1.7°C)
Note: Indoor dry bulb between 70°F and 80°F (21°C and 27°C)

Table 4 – Required Suction–Line Temperature

SUPERHEAT TEMP (°F)	SUCTION PRESSURE AT SERVICE PORT (PSIG)								
	107.8	112.2	116.8	121.2	126	130.8	138.8	140.8	145.8
0	35	37	39	41	43	45	47	49	51
2	37	39	41	43	45	47	49	51	53
4	39	41	43	45	47	49	51	53	55
6	41	43	45	47	49	51	53	55	57
8	43	45	47	49	51	53	55	57	59
10	45	47	49	51	53	55	57	59	61
12	47	49	51	53	55	57	59	61	63
14	49	51	53	55	57	59	61	63	65
16	51	53	55	57	59	61	63	65	67
18	53	55	57	59	61	63	65	67	69
20	55	57	59	61	63	65	67	69	71
22	57	59	61	63	65	67	69	71	73
24	59	61	63	65	67	69	71	73	75
26	61	63	65	67	69	71	73	75	77
28	63	65	67	69	71	73	75	77	79
30	65	67	69	71	73	75	77	79	81
32	67	69	71	73	75	77	79	81	83
34	69	71	73	75	77	79	81	83	85
36	71	73	75	77	79	81	83	85	87
38	73	75	77	79	81	83	85	87	89
40	75	77	79	81	83	85	87	89	91

Table 5 – Accessory Usage

ACCESSORY	REQUIRED FOR LOW–AMBIENT COOLING APPLICATIONS (Below 55°F/12.8°C)	REQUIRED FOR LONG LINE APPLICATIONS* (Over 80 ft./24.38 m)	REQUIRED FOR SEA COAST APPLICATIONS (Within 2 miles/3.22 km)
Ball Bearing Fan Motor	Yes†	No	No
Compressor Start Assist Capacitor and Relay	Yes	Yes	No
Crankcase Heater	Yes	Yes	No
Evaporator Freeze Thermostat	Yes	No	No
Hard Shut–Off TXV	Yes	Yes	Yes
Liquid Line Solenoid Valve	No	No	No
Motor Master® or Low–ambient Pressure Switch	Yes	No	No
Support Feet	Recommended	No	Recommended
Winter Start Control	Yes	No	No

* For tubing line sets between 80 and 200 ft. (24.38 and 60.96 m) and/or 20 ft. (6.09 m) vertical differential, refer to Residential Split–System Longline Application Guideline.

† Additional requirement for Low–Ambient Controller (full modulation feature) MotorMaster® Control.

Make Electrical Connections

Be sure field wiring complies with local and national fire, safety, and electrical codes, and voltage to system is within limits shown on unit rating plate. Contact local power company for correction of improper voltage. See unit rating plate for recommended circuit protection device.

NOTE: Operation of unit on improper line voltage constitutes abuse and could affect unit reliability. See unit rating plate. Do not install unit in system where voltage may fluctuate above or below permissible limits.

NOTE: Use copper wire only between disconnect switch and unit.

NOTE: Install branch circuit disconnect of adequate size per NEC to handle unit starting current. Locate disconnect within sight from and readily accessible from unit, per Section 440–14 of NEC.

Route Ground and Power Wires

Remove access panel to gain access to unit wiring. Extend wires from disconnect through power wiring hole provided and into unit control box.

⚠ WARNING

ELECTRICAL SHOCK HAZARD

Failure to follow this warning could result in personal injury or death.

The unit cabinet must have an uninterrupted or unbroken ground to minimize personal injury if an electrical fault should occur. The ground may consist of electrical wire or metal conduit when installed in accordance with existing electrical codes.

Connect Ground and Power Wires

Connect ground wire to ground connection in control box for safety. Connect power wiring to contactor as shown in Fig. 6.

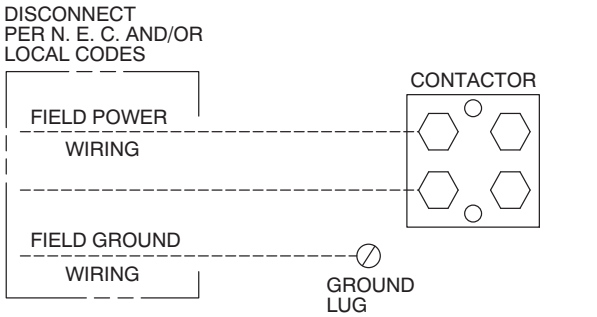

Fig. 6 – Line Connections

Connect Control Wiring

Route 24–v control wires through control wiring grommet and connect leads to control wiring (See Fig. 7). Refer to Installation Instructions packaged with thermostat.

Use No. 18 AWG color–coded, insulated (35°C minimum) wire. If thermostat is located more than 100 ft. (30.48 m) from unit, as measured along the control voltage wires, use No. 16 AWG color–coded wire to avoid excessive voltage drop.

All wiring must be NEC Class 1 and must be separated from incoming power leads.

Use furnace transformer, fan coil transformer, or accessory transformer for control power, 24v/40va minimum.

NOTE: Use of available 24v accessories may exceed the minimum 40va power requirement. Determine total transformer loading and increase the transformer capacity or split the load with an accessory transformer as required.

Final Wiring Check

IMPORTANT: Check factory wiring and field wire connections to ensure terminations are secured properly. Check wire routing to ensure wires are not in contact with tubing, sheet metal, etc.

Compressor Crankcase Heater

When equipped with a crankcase heater, furnish power to heater a minimum of 24 hr before starting unit. To furnish power to heater only, set thermostat to OFF and close electrical disconnect to outdoor unit.

A crankcase heater is required if refrigerant tubing is longer than 80 ft. (24.38 m). Refer to the Application Guideline and Service Manual Longline Section–Residential Split–System Air Conditioners and Heat Pumps.

Install Electrical Accessories

Refer to the individual instructions packaged with kits or accessories when installing.

Start–Up

⚠ CAUTION

UNIT OPERATION AND SAFETY HAZARD

Failure to follow this caution may result in personal injury, equipment damage or improper operation.

- Do not overcharge system with refrigerant.
- Do not operate unit in a vacuum or at negative pressure.
- Compressor dome temperatures may be hot.

⚠ CAUTION

PERSONAL INJURY HAZARD

Failure to follow this caution may result in personal injury.

Wear safety glasses, protective clothing, and gloves when handling refrigerant and observe the following:

- Front seating service valves are equipped with Schrader valves.

Follow these steps to properly start up system:

1. After system is evacuated, fully open liquid and vapor service valves.
2. Unit is shipped with valve stem(s) front seated (closed) and caps installed. Replace stem caps after system is opened to refrigerant flow. Replace caps finger–tight and tighten with wrench an additional 1/12 turn.
3. Close electrical disconnects to energize system.
4. Set room thermostat at desired temperature. Be sure set point is below indoor ambient temperature.
5. Set room thermostat to COOL and fan control to ON or AUTO mode, as desired. Operate unit for 15 minutes. Check system refrigerant charge.

Sequence of Operation

Turn on power to indoor and outdoor units. Transformer is energized.

On a call for cooling, thermostat makes circuits R–Y and R–G. Circuit R–Y energizes contactor, starting outdoor fan motor and compressor circuit. R–G energizes indoor unit blower relay, starting indoor blower motor on high speed.

When thermostat is satisfied, its contacts open, de–energizing contactor and blower relay. Compressor and motors stop.

If indoor unit is equipped with a time–delay relay circuit, the indoor blower will run an additional 90 seconds to increase system efficiency.

Check Charge

Factory charge amount and desired subcooling are shown on unit rating plate. Charging method is shown on information plate inside unit. To properly check or adjust charge, conditions must be favorable for subcooling charging. Favorable conditions exist when the outdoor temperature is between 70°F and 100°F (21.11°C and 37.78°C), and the indoor temperature is between 70°F and 80°F (21.11°C and 26.67°C). Follow the procedure below:

Unit is factory charged for 15ft (4.57 m) of lineset. Adjust charge by adding or removing 0.6 oz/ft of 3/8 liquid line above or below 15ft (4.57 m) respectively.

For standard refrigerant line lengths (80 ft/24.38 m or less), allow system to operate in cooling mode at least 15 minutes. If conditions are favorable, check system charge by subcooling method. If any adjustment is necessary, adjust charge slowly and allow system to operate for 15 minutes to stabilize before declaring a properly charged system.

If the indoor temperature is above 80°F (26.67°C), and the outdoor temperature is in the favorable range, adjust system charge by weight based on line length and allow the indoor temperature to drop to 80°F (26.67°C) before attempting to check system charge by subcooling method as described above.

If the indoor temperature is below 70°F (21.11°C), or the outdoor temperature is not in the favorable range, adjust charge for line set length above or below 15ft (4.57 m) only. Charge level should then be appropriate for the system to achieve rated capacity. The charge level could then be checked at another time when the both indoor and outdoor temperatures are in a more favorable range.

NOTE: If line length is beyond 80 ft (24.38 m) or greater than 20 ft (6.10 m) vertical separation, See Long Line Guideline for special charging requirements.

Final Checks

IMPORTANT: Before leaving job, be sure to do the following:

1. Ensure that all wiring is routed away from tubing and sheet metal edges to prevent rub–through or wire pinching.
2. Ensure that all wiring and tubing is secure in unit before adding panels and covers. Securely fasten all panels and covers.
3. Tighten service valve stem caps to 1/12–turn past finger tight.
4. Leave Owner's Manual with owner. Explain system operation and periodic maintenance requirements outlined in manual.
5. Fill out Dealer Installation Checklist and place in customer file.

CARE AND MAINTENANCE

For continuing high performance and to minimize possible equipment failure, periodic maintenance must be performed on this equipment.

Frequency of maintenance may vary depending upon geographic areas, such as coastal applications. See Owner's Manual for information.

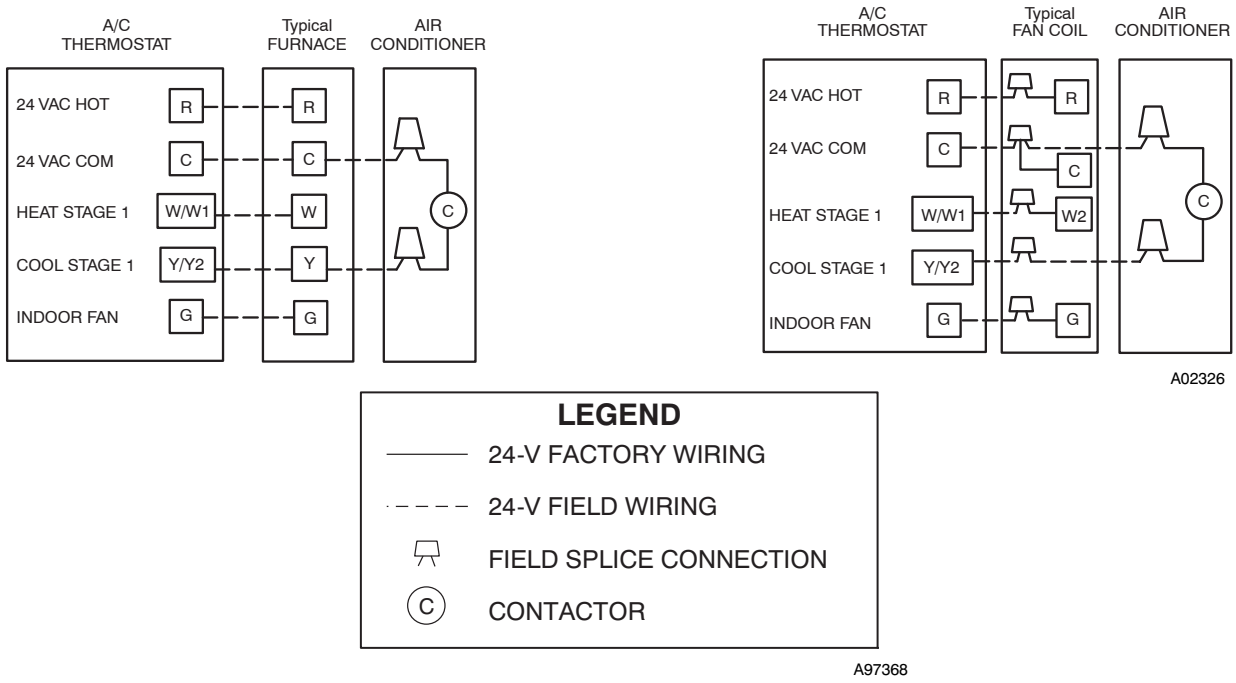

Fig. 7 – Generic Wiring Diagrams
(See Thermostat Installation Instruction for specific unit combinations)

PURON® (R−410A) REFRIGERANT QUICK REFERENCE GUIDE

- Puron refrigerant operates at 50−70 percent higher pressures than R−22. Be sure that servicing equipment and replacement components are designed to operate with Puron refrigerant
- Puron refrigerant cylinders are rose colored.
- Recovery cylinder service pressure rating must be 400 psig, DOT 4BA400 or DOT BW400.
- Puron refrigerant systems should be charged with liquid refrigerant. Use a commercial type metering device in the manifold hose when charging into suction line with compressor operating
- Manifold sets should be 700 psig high side and 180 psig low side with 550 psig low−side retard.
- Use hoses with 700 psig service pressure rating.
- Leak detectors should be designed to detect HFC refrigerant.
- Puron refrigerant, as with other HFCs, is only compatible with POE oils.
- Vacuum pumps will not remove moisture from oil.
- Do not use liquid−line filter driers with rated working pressures less than 600 psig.
- Do not leave Puron suction line filter driers in line longer than 72 hours.
- Do not install a suction−line filter drier in liquid line.
- POE oils absorb moisture rapidly. Do not expose oil to atmosphere.
- POE oils may cause damage to certain plastics and roofing materials.
- Wrap all filter driers and service valves with wet cloth when brazing.
- A factory approved liquid−line filter drier is required on every unit.
- Do NOT use an R−22 TXV.
- If indoor unit is equipped with an R−22 TXV or piston metering device, it must be changed to a hard shutoff Puron TXV.
- Never open system to atmosphere while it is under a vacuum.
- When system must be opened for service, recover refrigerant, evacuate then break vacuum with dry nitrogen and replace filter driers. Evacuate to 500 microns prior to recharging.
- Do not vent Puron refrigerant into the atmosphere.
- Do not use capillary tube coils.
- Observe all **warnings**, **cautions**, and **bold** text.
- All indoor coils must be installed with a hard shutoff Puron TXV metering device.

©2015 Bryant Heating & Cooling Systems ● 7310 W. Morris St. ● Indianapolis, IN 46231
Edition Date: 02/15

Catalog No. II123A—26B—07

Replaces: II123A—26B—06

Manufacturer reserves the right to discontinue, or change at any time, specifications or designs without notice and without incurring obligations.